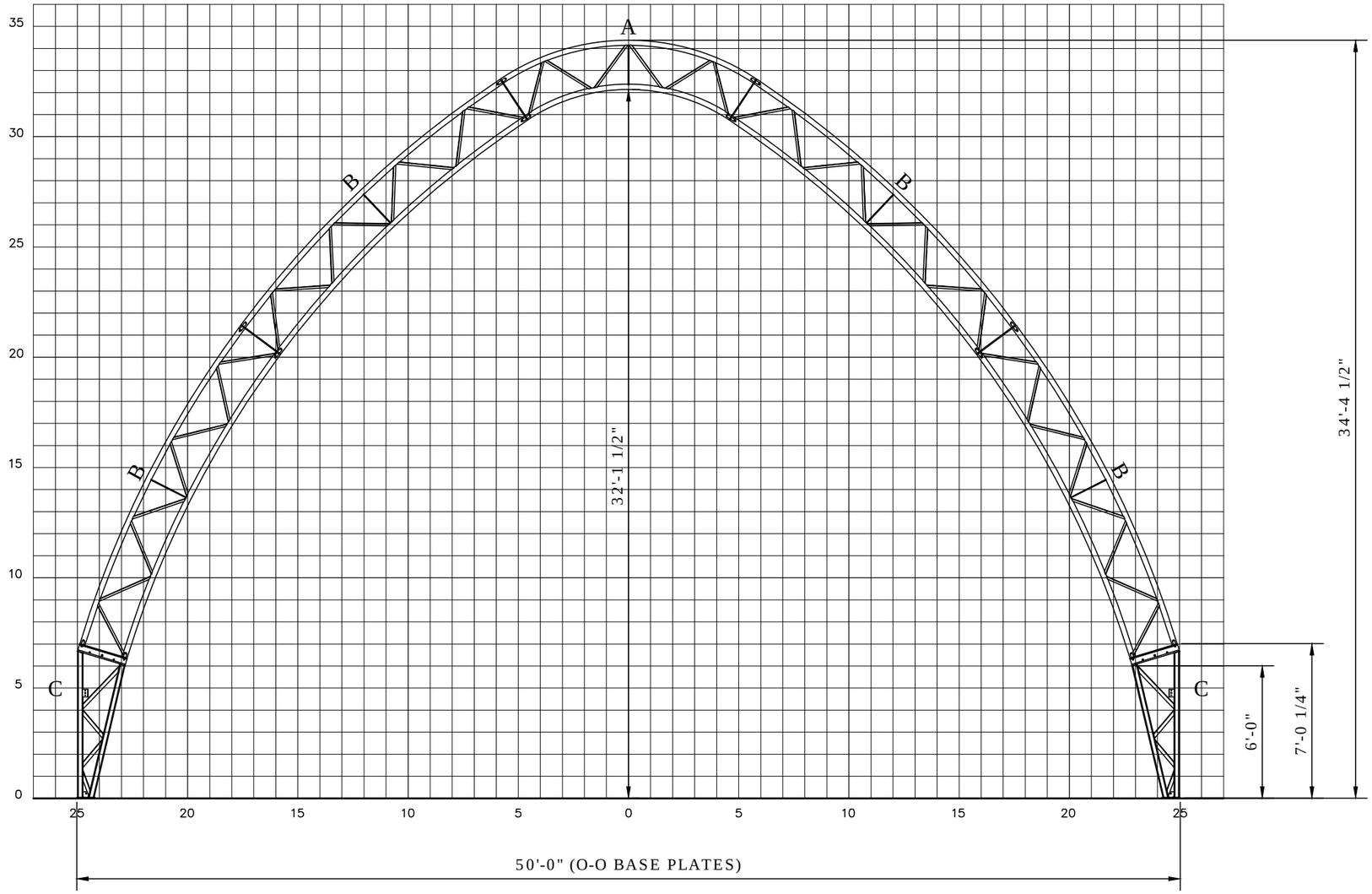

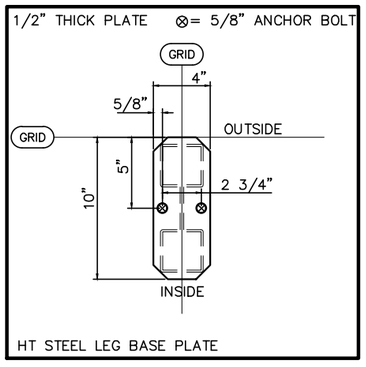

50 HT TRUSS COMPONENT SCHEDULE		
MARK	PART No.	DESCRIPTION
A	TR6014A	HT 50' CENTER SECTION TRUSS
B	TR6004A	HT UNIVERSAL SECTION TRUSS
C	LE6008A	6' HT LEG TRUSS
PROFILE WEIGHT = 1105 LBS.		